JET PUMP

SERVICE TOOLS

Description	Part Number	Page
ENGINE ALIGNMENT PLATE	529 036 278	6
IMPELLER SHAFT BEARING TOOL	529 036 168	13
IMPELLER SHAFT BEARING TOOL	529 036 279	14
IMPELLER SHAFT PUSHER	529 035 955	12–13
PRESSURE CAP	529 036 283	4
PTO ADAPTER	529 036 273	10–11, 16
VACUUM/PRESSURE PUMP	529 021 800	4

SERVICE PRODUCTS

Description	Part Number	Page
JET PUMP BEARING GREASE	293 550 032	14, 16
LOCTITE 243 (BLUE)	293 800 060	7–8
LOCTITE 577 (THREAD SEALANT)	293 800 050	11
LOCTITE 767 (ANTISEIZE LUBRICANT)	293 800 070	11
PULLEY FLANGE CLEANER	413 711 809	6
TRIPLE-GUARD GREASE	296 000 329	6–7, 11
XPS SYNTHETIC GREASE	293 550 010	7, 11

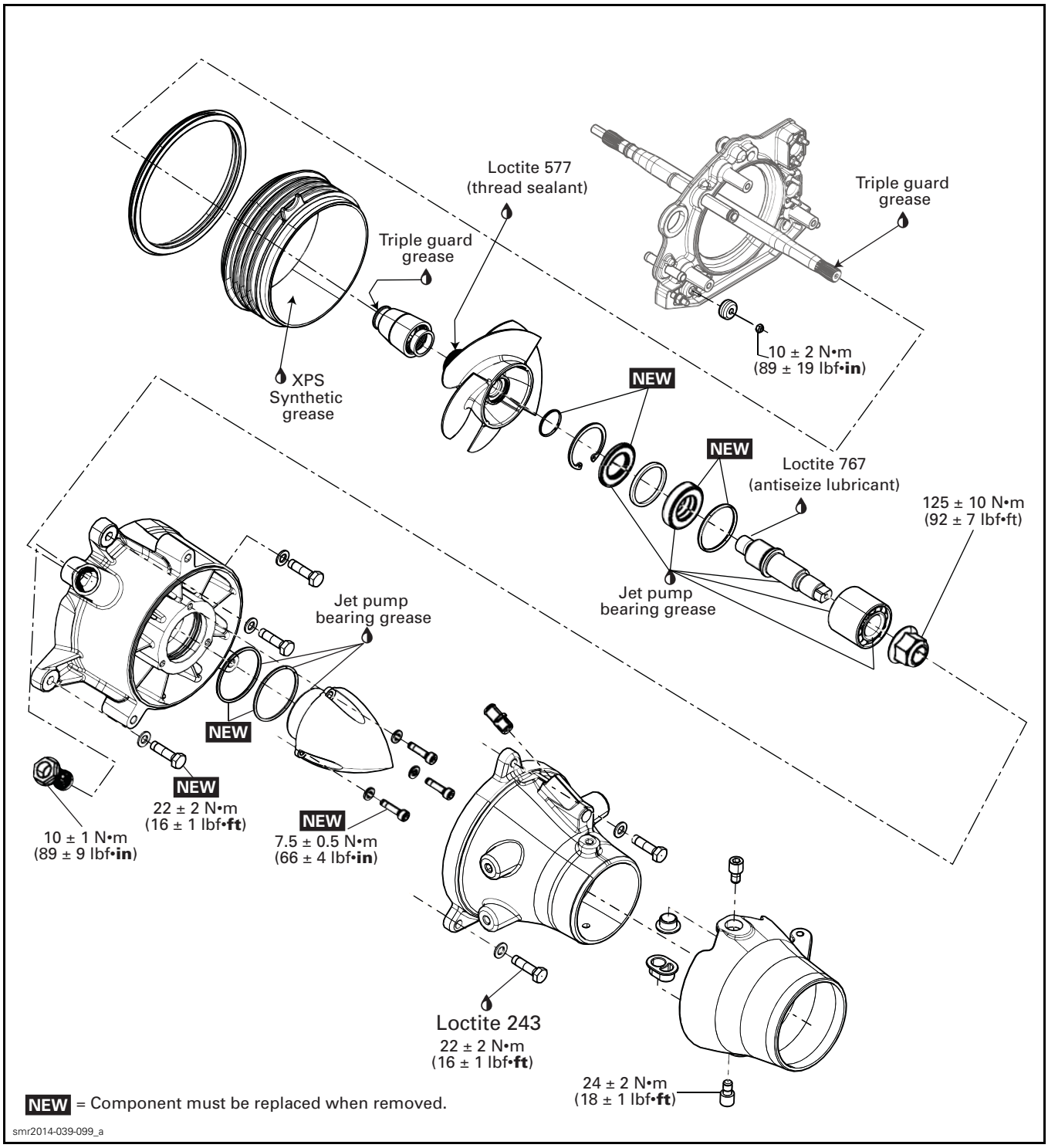
Loctite 577
(thread sealant)
Triple guard
grease
Triple guard
grease
XPS
Synthetic
grease
10 ± 2 N•m
(89 ± 19 lbf•in)
NEW
NEW
Loctite 767
(antiseize lubricant)
125 ± 10 N•m
(92 ± 7 lbf•ft)
Jet pump
bearing grease
Jet pump
bearing grease
NEW
NEW
22 ± 2 N•m
(16 ± 1 lbf•ft)
10 ± 1 N•m
(89 ± 9 lbf•in)
NEW
7.5 ± 0.5 N•m
(66 ± 4 lbf•in)
Loctite 243
22 ± 2 N•m
(16 ± 1 lbf•ft)
24 ± 2 N•m
(18 ± 1 lbf•ft)
NEW = Component must be replaced when removed.
smr2014-039-099_a

GENERAL

JET PUMP MAIN COMPONENTS

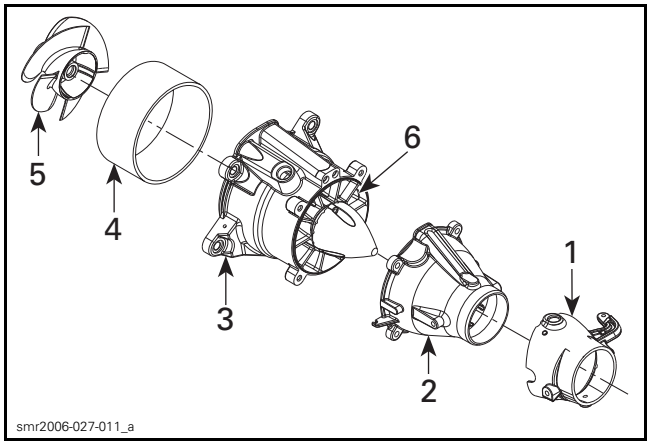

TYPICAL
1. *Nozzle*
2. *Venturi*
3. *Jet pump housing*
4. *Wear ring*
5. *Impeller*
6. *Stator*

INSPECTION

IMPELLER CONDITION

Condition of impeller, impeller boot and wear ring can be quickly checked from underneath the watercraft. With the vehicle on the trailer, use a flashlight to visually inspect them through the inlet grate.

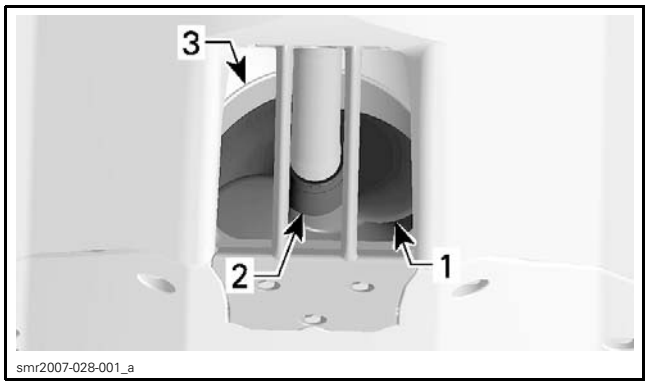

TYPICAL — UNDERNEATH HULL
1. *Impeller*
2. *Impeller boot*
3. *Wear ring*

IMPELLER/WEAR RING CLEARANCE

This clearance is critical for jet pump performance.

To check clearance, remove jet pump.

Using a feeler gauge, measure clearance between impeller blade tip and wear ring. Measure each blade at its center.

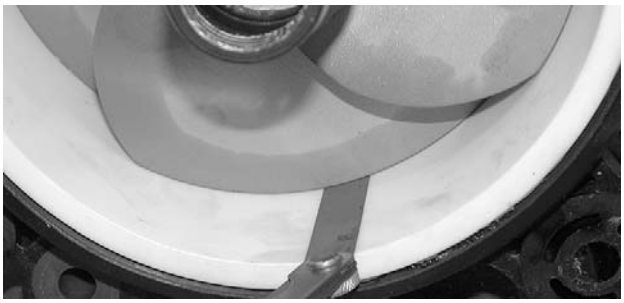

TYPICAL

MODEL	MAXIMUM WEAR CLEARANCE
All models	0.35 mm (.014 in)

IMPELLER SHAFT RADIAL PLAY

Radial play is critical for jet pump life span.

To check radial play, remove jet pump.

Make sure impeller shaft turns freely and smoothly.

1. Retain housing in a soft jaw vise making sure not to damage housing lug.
2. Set a dial gauge and position its tip onto metal end, close to the end of the impeller hub.
3. Move shaft end up and down. Difference between highest and lowest dial gauge reading is radial play.

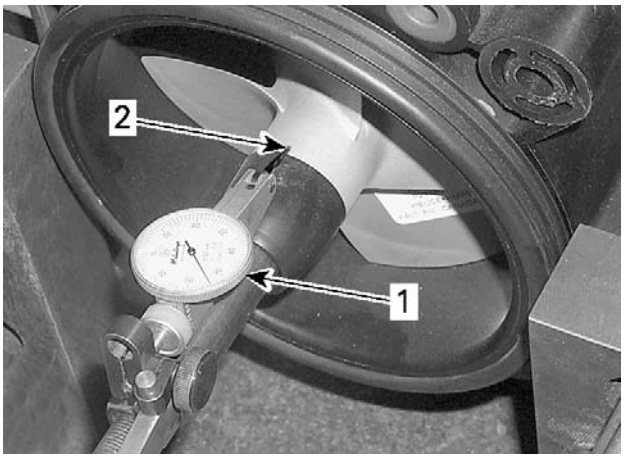

TYPICAL — MEASURING IMPELLER SHAFT RADIAL PLAY
1. *Dial gauge*
2. *Measure close to impeller hub end*

RADIAL PLAY
0 mm (0 in)

Excessive play can come either from worn bearing or damaged jet pump housing bearing surface.

LEAK TEST

Whenever performing any type of repair on the jet pump, a leak test should be carried out.

Proceed as follows:

1. Remove impeller cover. Refer to *IMPELLER COVER* in this subsection.
2. Remove impeller. Refer to *IMPELLER*.
3. Install the PRESSURE CAP (P/N 529 036 283) on pump housing.

PRESSURE CAP

4. Connect the VACUUM/PRESSURE PUMP (P/N 529 021 800) to the pressure cap fitting.

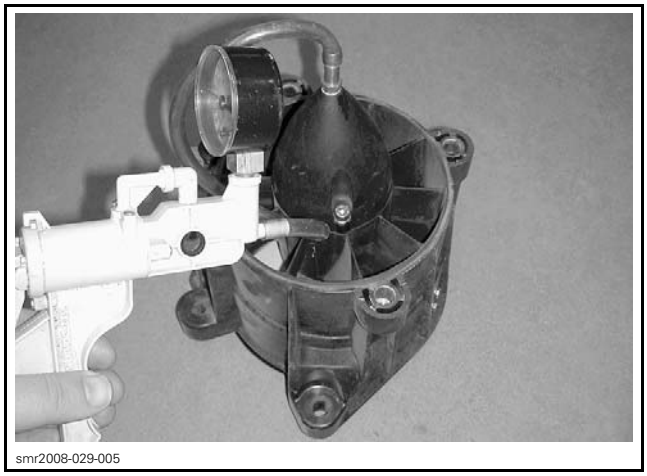

TYPICAL

5. Pressurize pump.

LEAK TEST PRESSURE
Maximum 70 kPa (10 PSI)

6. Pump must maintain this pressure for at least 5 minutes.
   – If there is a pressure drop, spray soapy water around cover. If there are no bubbles, impeller shaft and impeller shaft seal must be replaced. Jet pump unit has to be disassembled.

NOTE: If there is 2 or 3 bubbles coming out from the seal on the impeller side is acceptable. Leaks from other areas must be repaired.

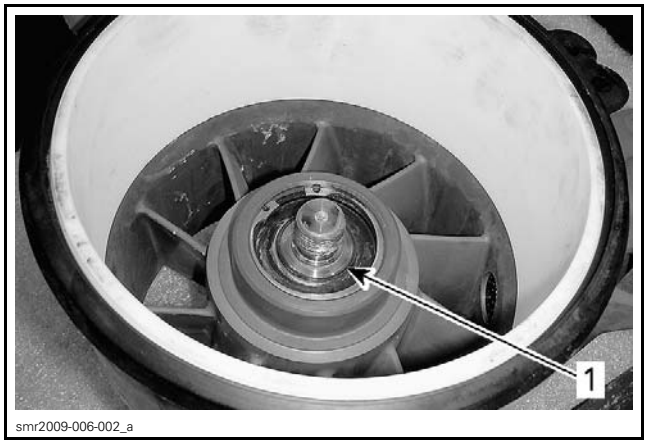

TYPICAL
1. Small leak here is acceptable

NOTICE **Repair any leak. Failure to correct a leak will lead to premature wear of pump components.**

7. Disconnect pump and remove pressure cap.
8. Reinstall impeller cover. Refer to *IMPELLER COVER* in this subsection.

PROCEDURES

NOTE: Whenever removing a part, visually check for damage such as: corrosion, cracks, split, break, porosity, cavitation, deformation, distortion, heating discoloration, wear pattern, defective plating, missing or broken balls in ball bearing, water damage diagnosed by black-colored spots on metal parts, etc. Replace any damaged parts. As a quick check, manually feel clearance and end play, where applicable, to detect excessive wear.

SACRIFICIAL ANODE

Sacrificial Anode Inspection

Check for wear. If worn more than half, replace anode.

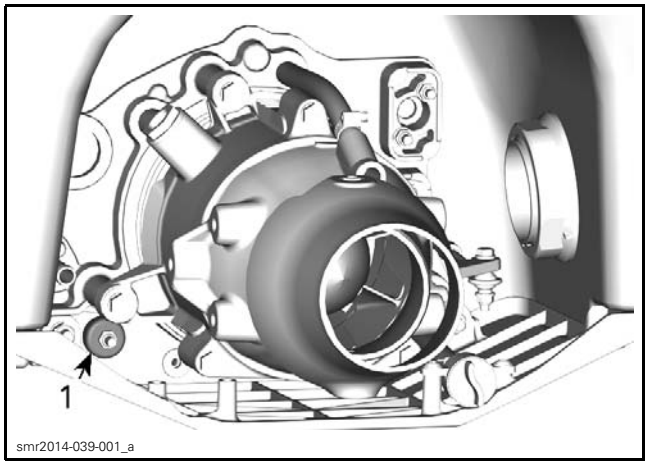

1. Sacrificial anode location

Sacrificial Anode Removal

Unscrew sacrificial anode retaining nut and remove anode.

Sacrificial Anode Installation

Installation is the reverse of the removal procedure.

Torque anode retaining nut as specified in exploded view.

JET PUMP HOUSING

NOTE: The jet pump housing can be removed as an assembly with the venturi and nozzle. This is the preferred procedure when either the drive shaft or engine removal is required.

Jet Pump Housing Removal

Follow image sequence.

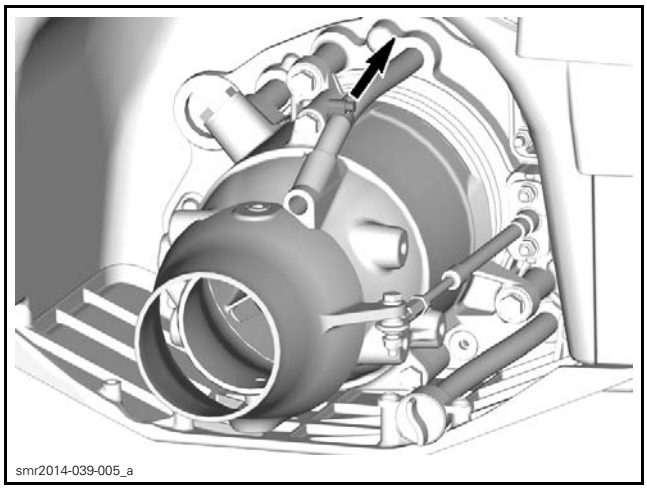

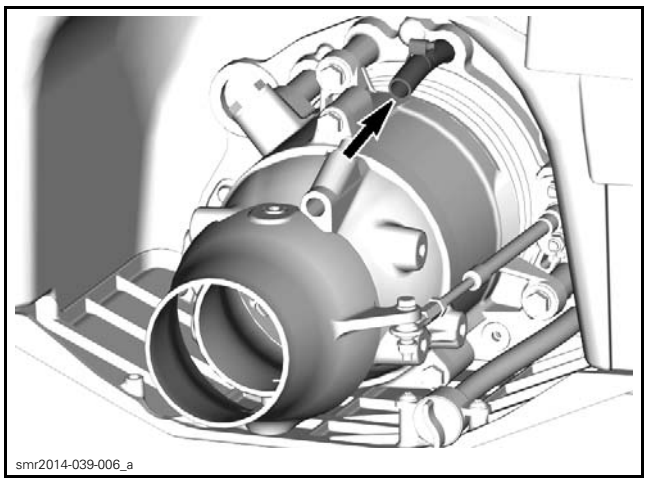

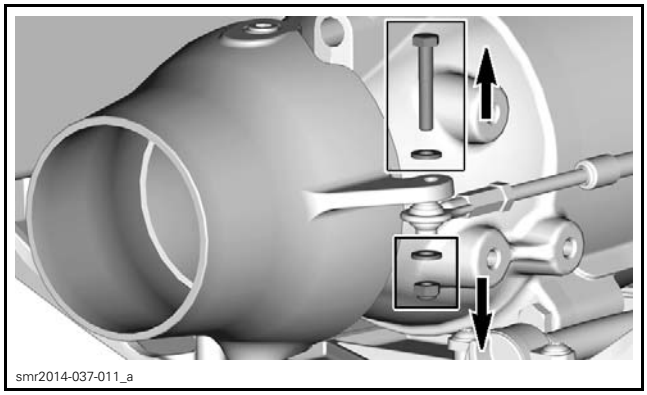

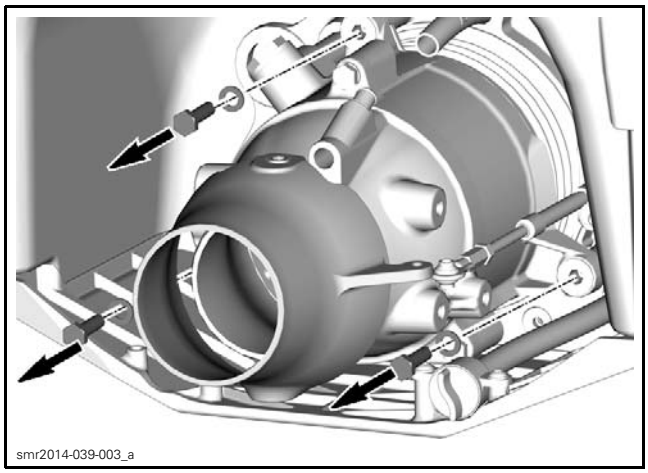
smr2014-039-003_a

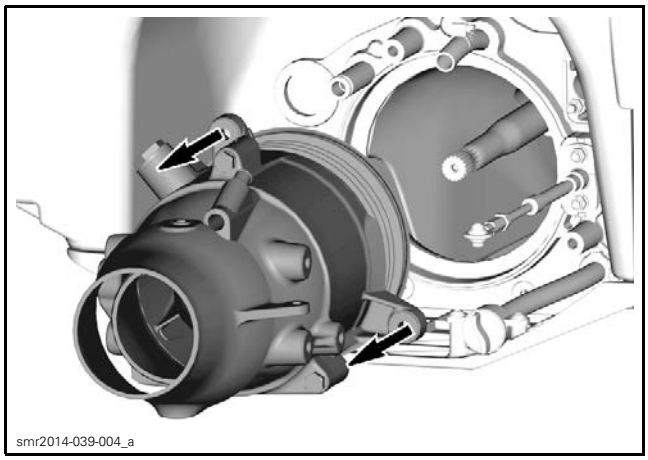
smr2014-039-004_a

Temporarily fasten the ENGINE ALIGNMENT PLATE (P/N 529 036 278) to pump support to support drive shaft and avoid PTO oil seal damage.

529036278

Jet Pump Housing Inspection and Cleaning

1. Visually inspect jet pump housing. Pay attention to the stator. Ensure the assembly is clean and free of any debris and defects.
2. Ensure the neoprene seal is in good condition. Replace as required.

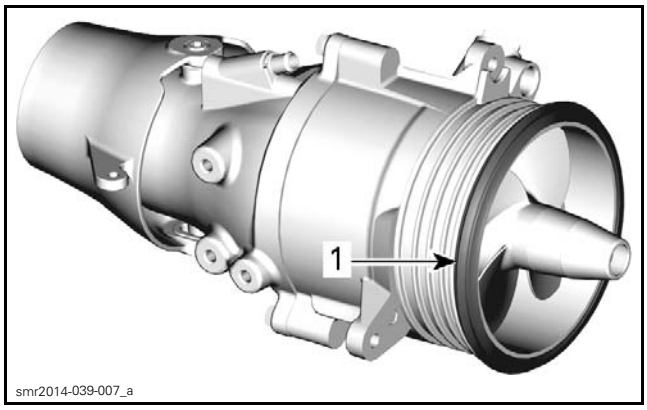

smr2014-039-007_a

1. Neoprene seal

Jet Pump Housing Installation

Brush and clean impeller splines and drive shaft splines with PULLEY FLANGE CLEANER (P/N 413 711 809) or equivalent. Splines must be free of any residue.

Lubricate drive shaft splines, impeller splines and the inside of the impeller boot with TRIPLE-GUARD GREASE (P/N 296 000 329).

Ensure the neoprene seal is properly installed on the wear ring.

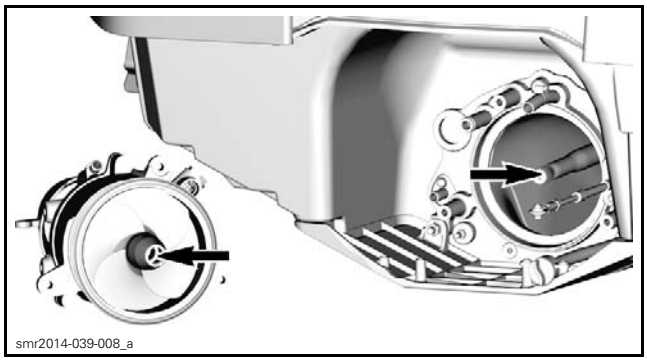
smr2014-039-008_a

CLEANING AND LUBRICATION POINTS

Install a new O-ring

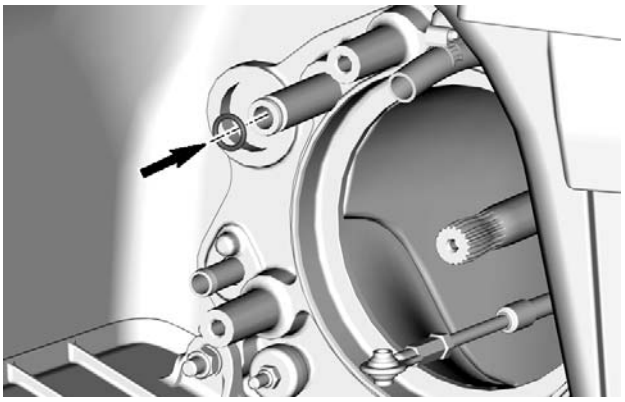
smr2014-039-009_b

Reverse removal procedure.

Generously apply TRIPLE-GUARD GREASE (P/N 296 000 329) on drive shaft splines.

NOTE: Slightly lubricate wear ring with XPS SYNTHETIC GREASE (P/N 293 550 010) to minimize friction during initial impeller start.

Install jet pump.

NOTE: If necessary, wiggle jet pump to engage drive shaft splines in impeller.

TIGHTENING TORQUE	
NEW M8 jet pump housing retaining screws	22 N•m ± 2 N•m (16 lbf•ft ± 1 lbf•ft)

NOZZLE

Nozzle Removal

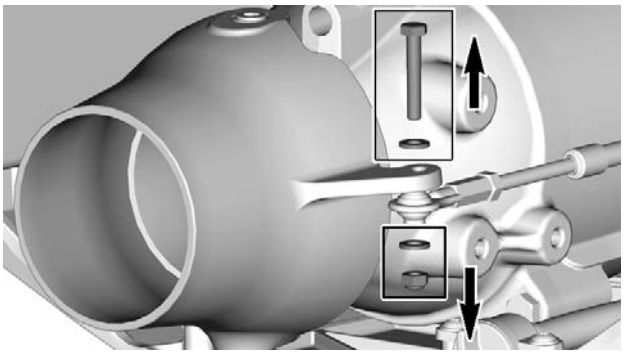
smr2014-037-011_a

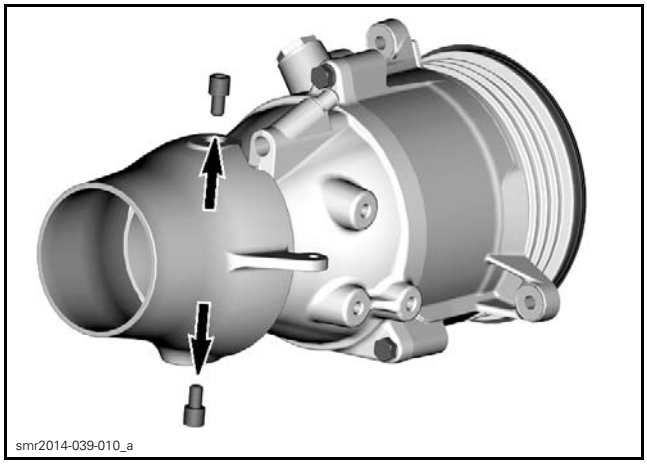
smr2014-039-010_a

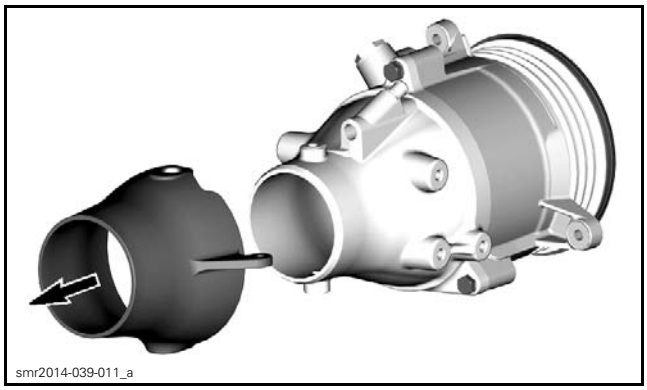
smr2014-039-011_a

Steering Nozzle Inspection

Inspect steering nozzle for cracks, wear, deformation, and other damages.

Inspect bushings for wear or other damage.

Replace parts as required.

Nozzle Installation

Reverse removal procedure.

Apply LOCTITE 243 (BLUE) (P/N 293 800 060) on screw threads (or use new self-locking screws).

2UP models

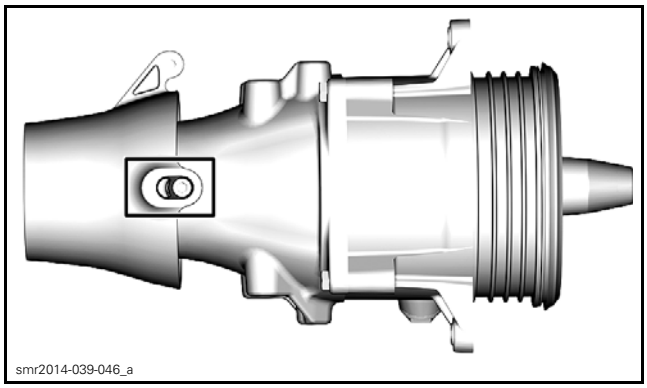
smr2014-039-046_a

2UP NOZZLE

3UP models

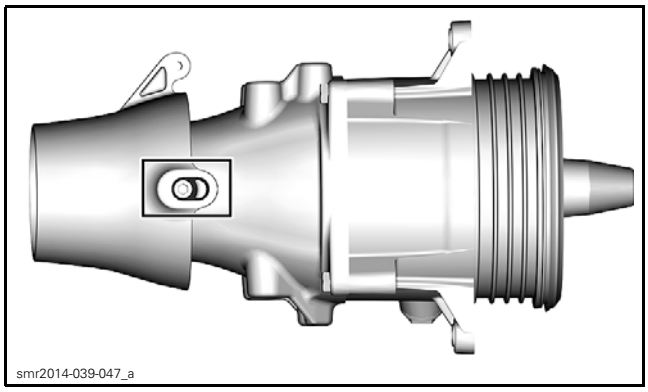
smr2014-039-047_a

3UP NOZZLE

TIGHTENING TORQUE	
M8 nozzle retaining screws	24 N•m ± 2 N•m (18 lbf•ft ± 1 lbf•ft)

VENTURI

Venturi Removal

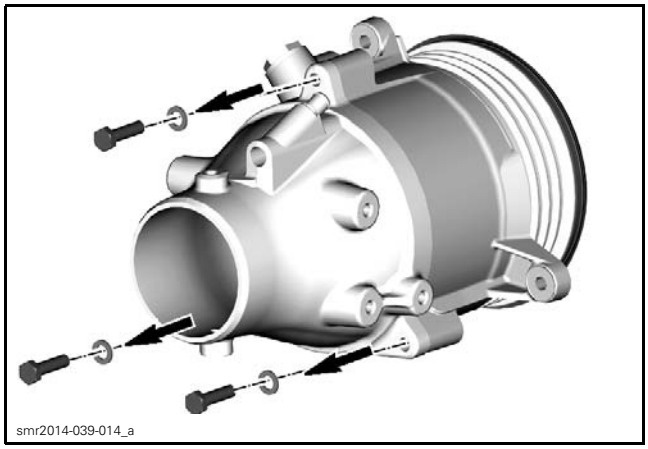
smr2014-039-014_a

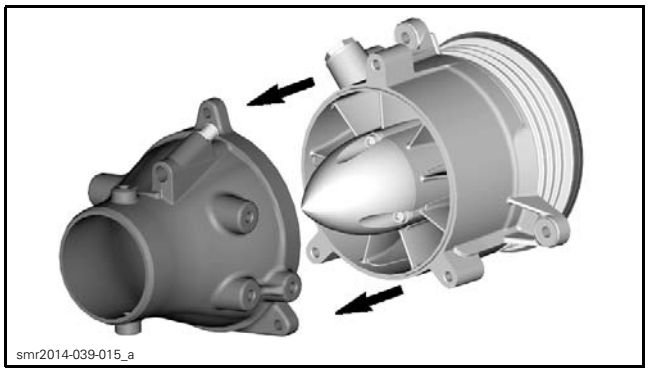
smr2014-039-015_a

Venturi Installation

Reverse removal procedure.

Apply LOCTITE 243 (BLUE) (P/N 293 800 060) on threads of venturi retaining screws (or install new self-locking screws).

Install venturi screws and flat washers.

TIGHTENING TORQUE	
Venturi retaining screws	22 N•m ± 2 N•m (16 lbf•ft ± 1 lbf•ft)

IMPELLER COVER

Impeller Cover Removal

1. Remove the venturi. Refer to *VENTURI*.

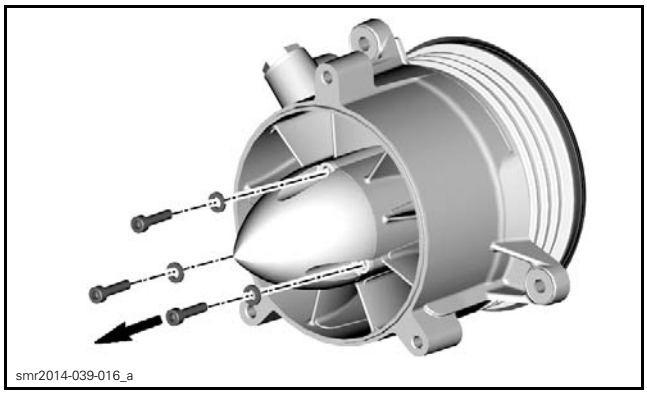
smr2014-039-016_a

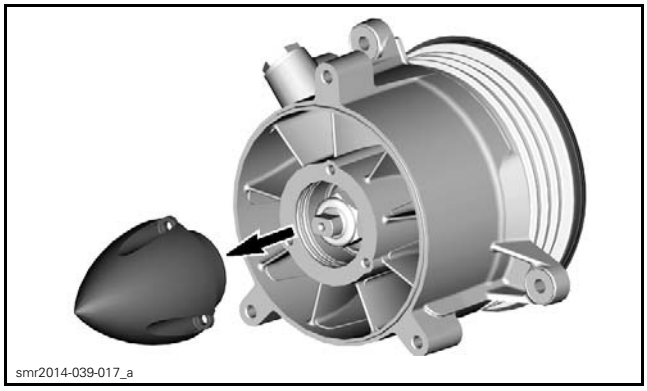
smr2014-039-017_a

2. With pump housing in vertical position, remove and discard the 3 retaining screws.

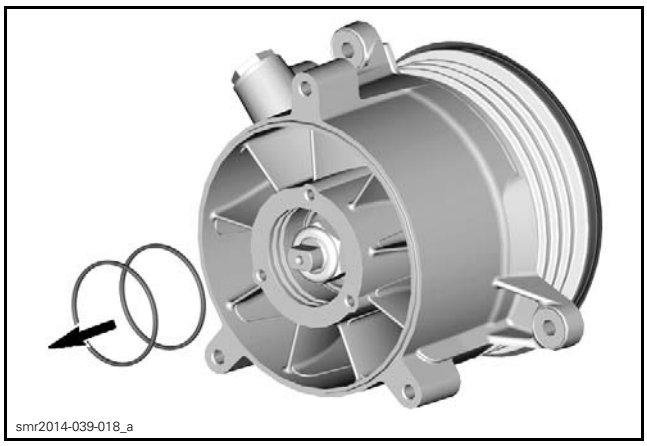
smr2014-039-018_a

Impeller Cover Inspection

Check for presence of water in cover and bearing area. If water is found:

– Replace impeller and pump housing O-rings. Refer to *IMPELLER SHAFT AND BEARING*.
– Replace impeller shaft seals. Refer to *IMPELLER SHAFT AND BEARING*.
– Replace impeller cover O-rings and/or impeller cover. Refer to *IMPELLER COVER*.

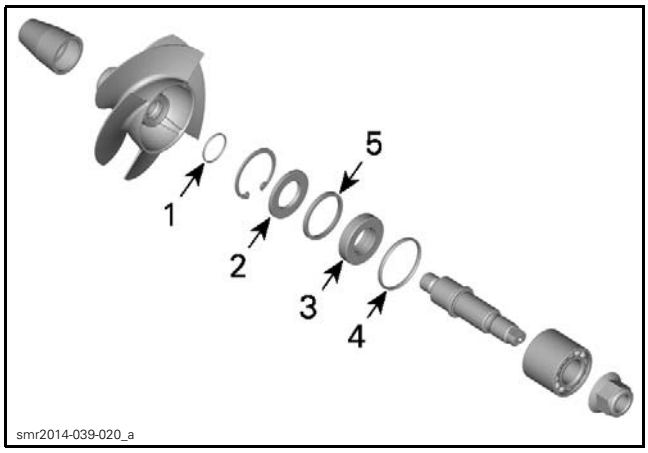

1. *Impeller O-ring*
2. *Outer impeller shaft seal*
3. *Inner impeller shaft seal*
4. *Pump housing O-ring*
5. *Spacer*

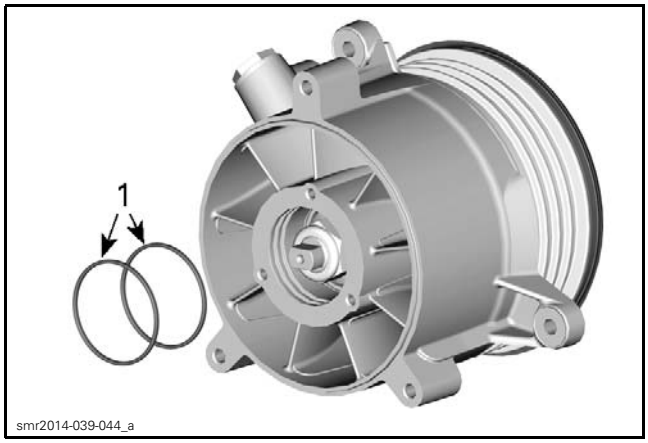

1. *Impeller cover O-rings*

Perform a leak test. Refer to *LEAK TEST* in this subsection.

Impeller Cover Installation

1. Install new O-rings in their respective grooves.
2. Reverse removal procedure.

NOTE: Push cover against pump housing while alternately tightening screws. Make sure O-rings are positioned correctly and they are not damaged when pushing the cover.

TIGHTENING TORQUE	
NEW M6 impeller cover retaining screws	7.5 N•m ± 0.5 N•m (66 lbf•**in** ± 4 lbf•**in**)

IMPELLER

Impeller Removal

NOTE: If impeller shaft is to be disassembled, loosen the impeller shaft nut prior to removing the impeller.

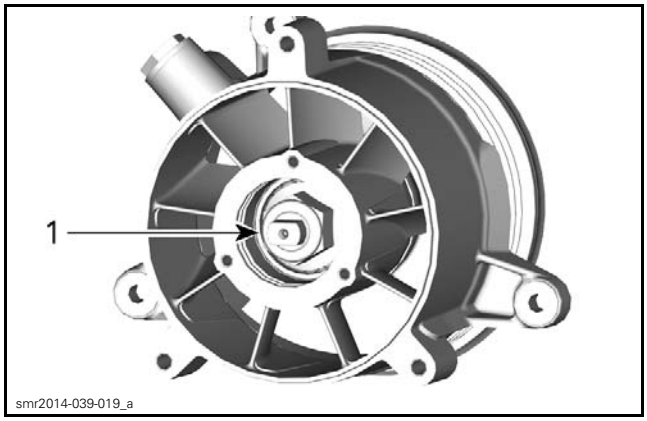

1. *Impeller shaft nut*

1. Remove jet pump from the watercraft. Refer to *JET PUMP HOUSING* .
2. Remove impeller cover. Refer to *IMPELLER COVER*.
3. Remove wear ring. Refer to *WEAR RING*.

NOTICE **Remove impeller boot by turning it clockwise (LH threads).**

NOTE: The impeller boot is the only component with LH threads.

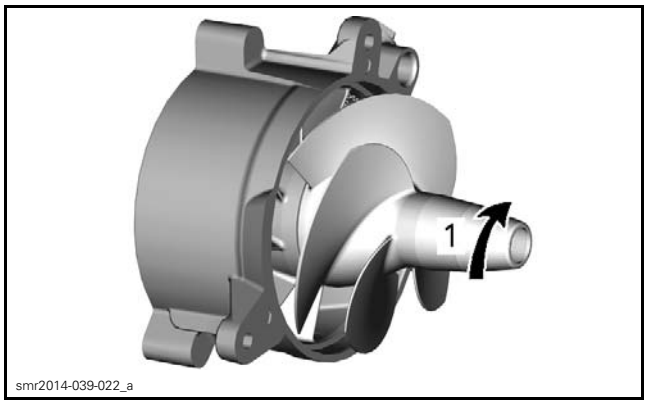

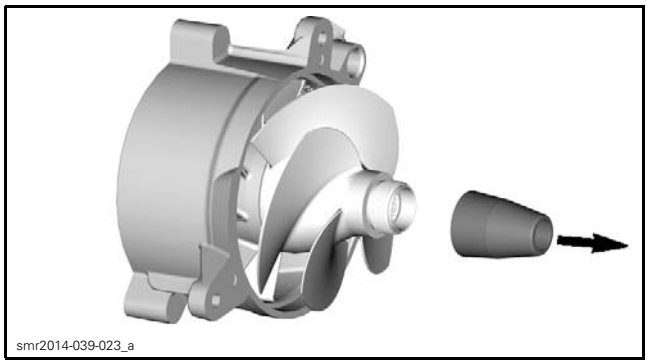
smr2014-039-023_a

4. Mount the flat sides of impeller shaft in a vise.

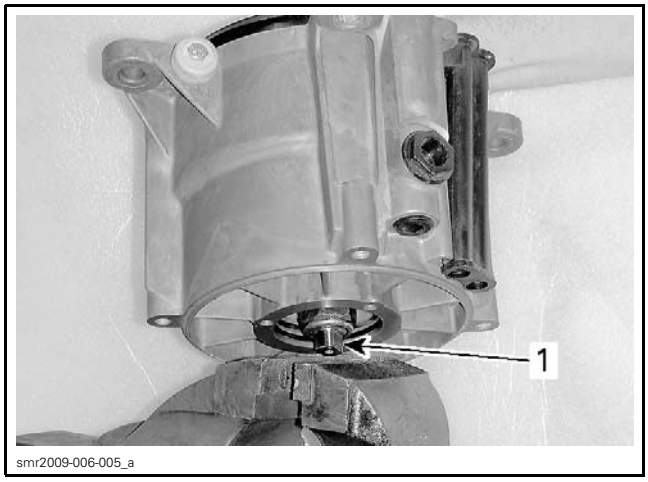

smr2009-006-005_a

TYPICAL
1. Flat side

5. Unscrew the impeller using the required tool.

REQUIRED TOOL
PTO ADAPTER (P/N 529 036 273)

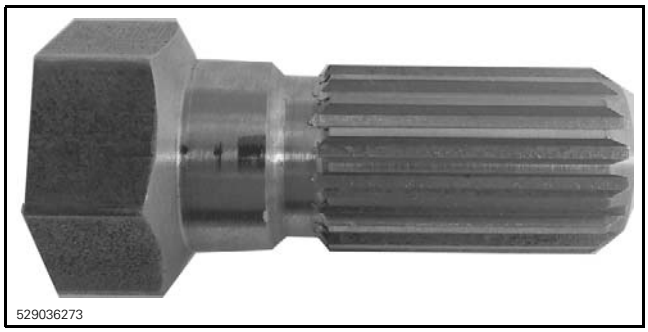
529036273

NOTE: It may be necessary to heat the impeller to ease removal.

NOTICE Never use an impact wrench to loosen impeller.

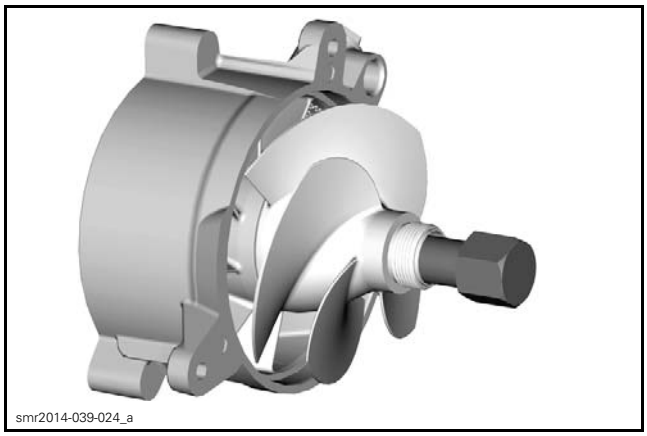
smr2014-039-024_a

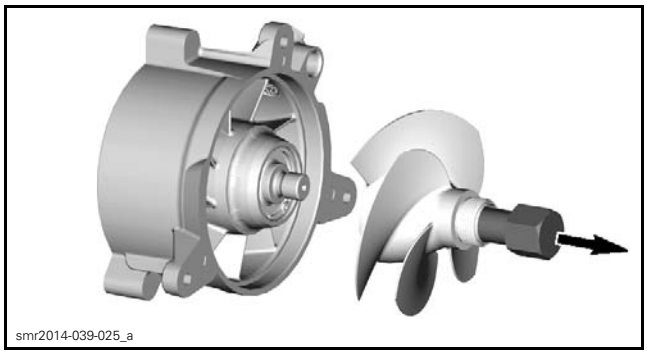
smr2014-039-025_a

6. Clean impeller to boot threads.

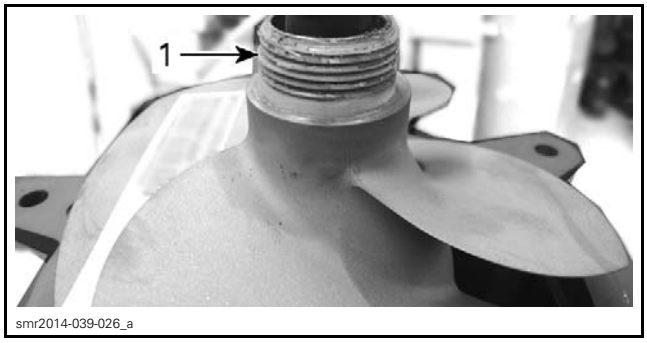

smr2014-039-026_a

IMPELLER
1. Impeller to boot threads

7. Discard impeller O-ring.

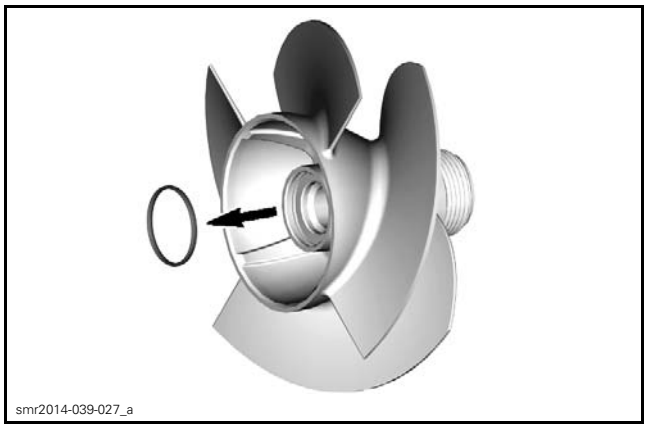
smr2014-039-027_a

Impeller Installation

Reverse removal procedure.

1. Install a new impeller O-ring.
2. Apply LOCTITE 767 (ANTISEIZE LUBRICANT) (P/N 293 800 070) on threads of impeller shaft.

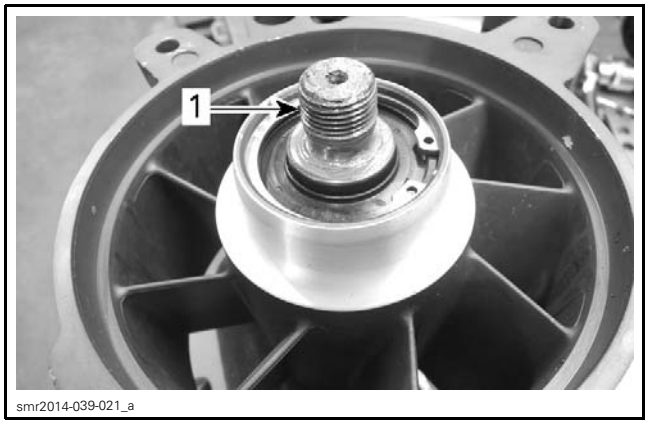

1. Antiseize lubricant

TIGHTENING TORQUE	
Impeller	125 N•m ± 10 N•m (92 lbf•ft ± 7 lbf•ft)

NOTICE **Never use an impact wrench to tighten impeller shaft.**

3. Apply LOCTITE 577 (THREAD SEALANT) (P/N 293 800 050) on impeller to boot threads.
4. Apply TRIPLE-GUARD GREASE (P/N 296 000 329) inside impeller boot.
5. Install impeller boot on impeller and tighten counterclockwise.

WEAR RING

Wear Ring Inspection

Check wear ring for:

– Deep scratches
– Irregular surface
– Any apparent damage.

Check *IMPELLER/WEAR RING CLEARANCE*, see procedure at the beginning of this subsection.

Wear Ring Removal

Remove jet pump from watercraft. Refer to *JET PUMP HOUSING*.

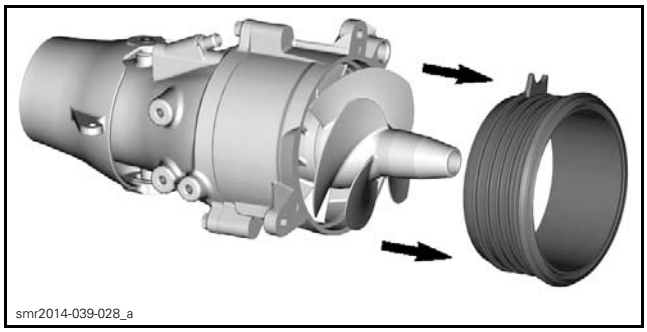

Wear Ring Installation

Check wear ring neoprene seal condition. Replace if necessary.

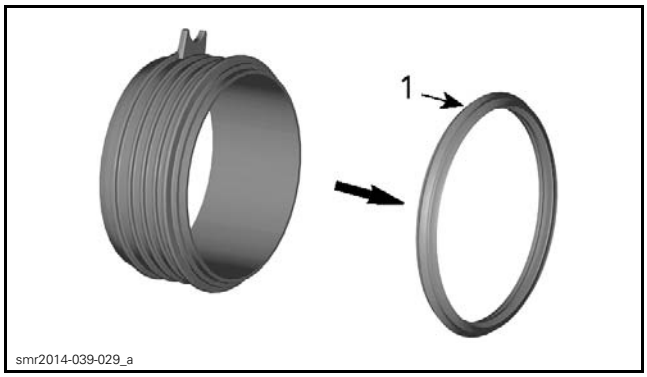

1. Wear ring neoprene seal

Align anti rotation tab on wear ring with jet pump housing.

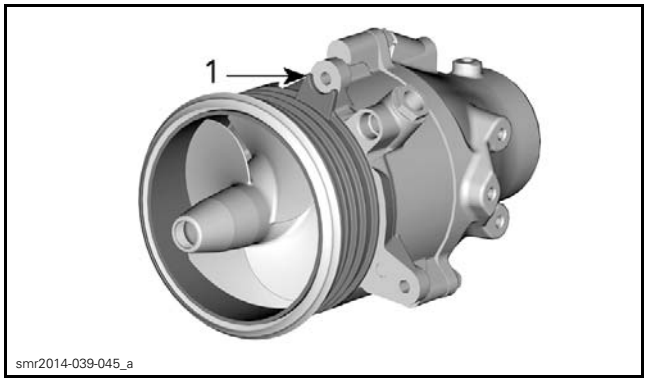

WEAR RING POSITION
1. Anti rotation tab

Apply XPS SYNTHETIC GREASE (P/N 293 550 010) on the wear ring surface.

IMPELLER SHAFT AND BEARING

Impeller Shaft and Bearing Removal

1. Remove impeller cover. Refer to *IMPELLER COVER* in this subsection.

REQUIRED TOOL
PTO ADAPTER (P/N 529 036 273)

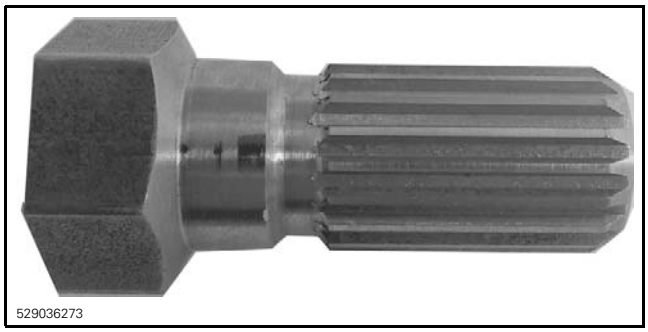
529036273

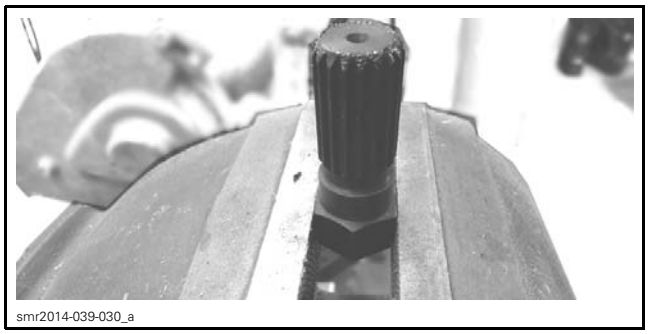
smr2014-039-030_a

2. Install jet pump housing over impeller remover/installer tool.

smr2014-039-031_a

3. Using a 30 mm socket, unscrew the impeller shaft nut.
4. Remove impeller shaft nut.

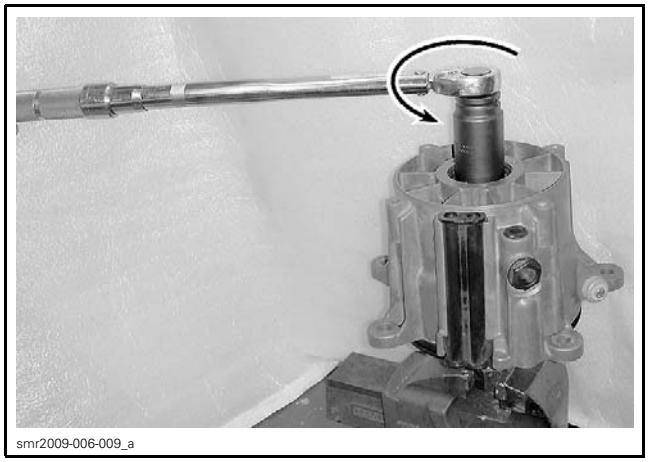
smr2009-006-009_a
TYPICAL

NOTE: If impeller loosens instead of shaft nut, torque impeller to 300 N•m (221 lbf•ft) and retry.

5. Remove impeller. Refer to *IMPELLER*.
6. From the impeller side, remove circlip, seals, spacer and O-ring from jet pump housing.

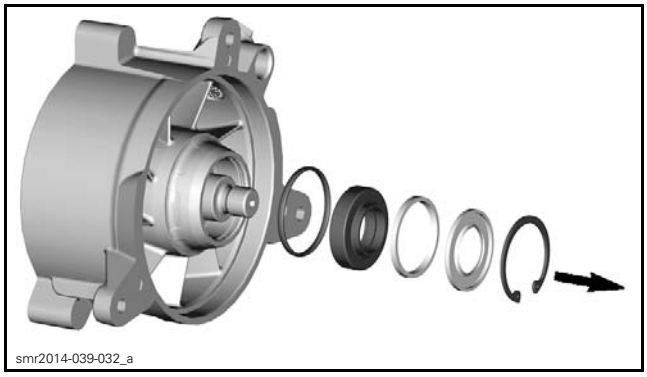
smr2014-039-032_a

REQUIRED TOOL
IMPELLER SHAFT PUSHER (P/N 529 035 955)

529035955

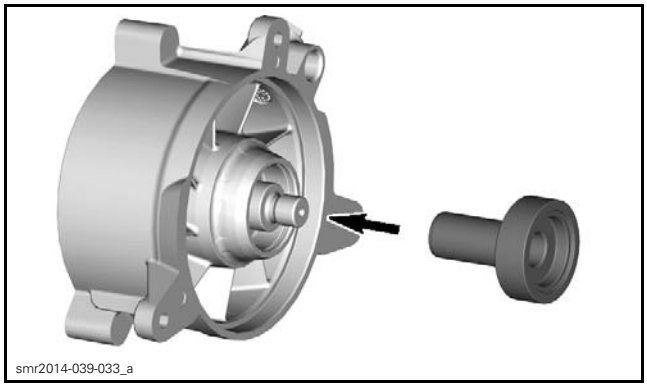
smr2014-039-033_a

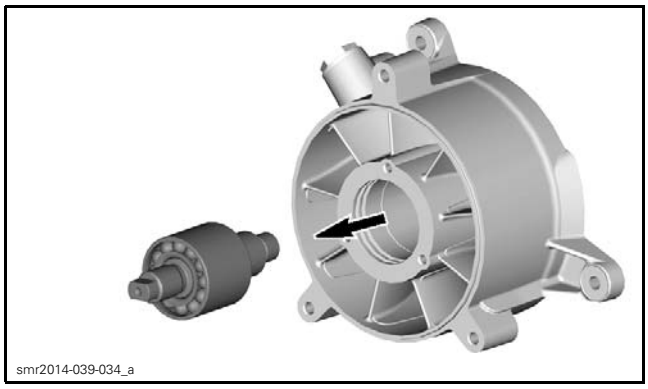
smr2014-039-034_a

7. Use the required tool to press bearing off impeller shaft.

REQUIRED TOOL
IMPELLER SHAFT BEARING TOOL (P/N 529 036 168)

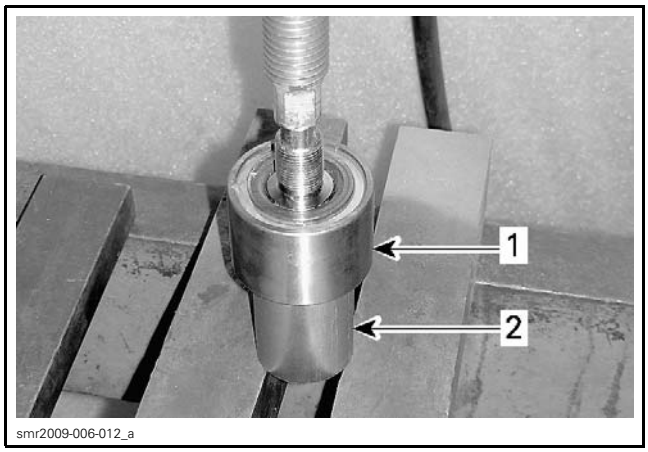

smr2009-006-012_a

TYPICAL
1. *Impeller shaft and bearing*
2. *Impeller shaft bearing tool on INNER race*

Impeller Shaft and Bearing Inspection

With your finger nail, feel seal lip contact surface on shaft. If any irregular surface is found, replace shaft and seals.

Check condition of shaft threads.

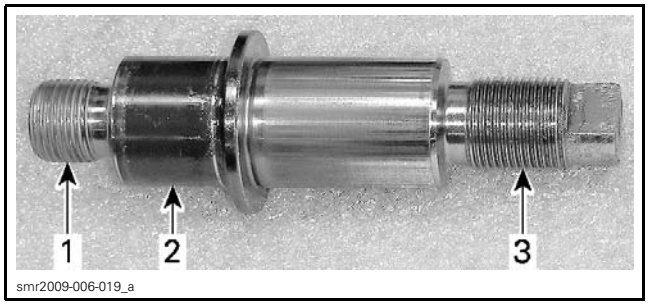

smr2009-006-019_a

TYPICAL
1. *Threads*
2. *Seal lip contact surface*
3. *Threads*

Inspect ball bearing for corrosion.

Impeller Shaft and Bearing Installation

Bearing Installation

The installation is essentially the reverse of the removal procedure. However, pay attention to the following.

1. Using the required tool on the bearing inner race, press the bearing on the impeller shaft.

REQUIRED TOOL
IMPELLER SHAFT BEARING TOOL (P/N 529 036 168)

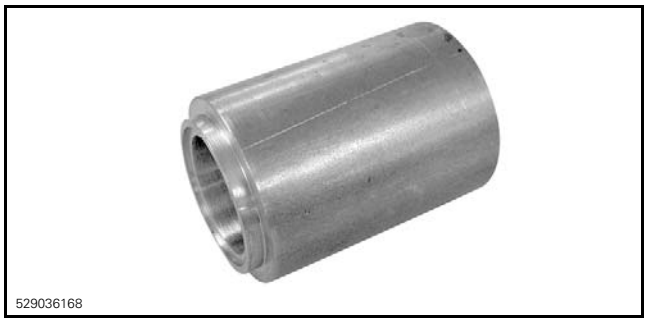
529036168

2. Use the required tool to protect the impeller shaft threads.

REQUIRED TOOL
IMPELLER SHAFT PUSHER (P/N 529 035 955)

529035955

NOTE: The bearing can be installed in either direction.

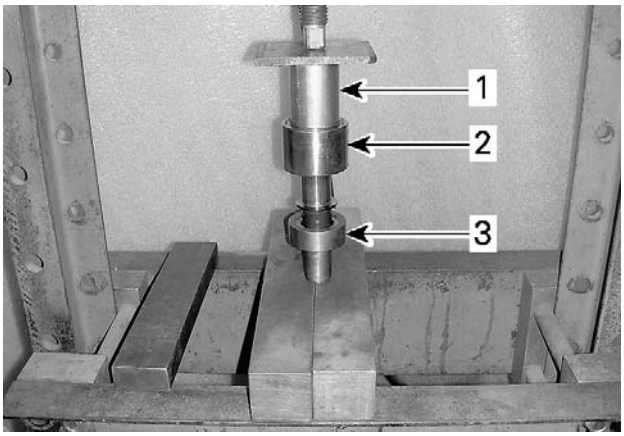

smr2009-006-013_a

TYPICAL
1. *Impeller shaft bearing tool on INNER race*
2. *Impeller shaft and bearing*
3. *Impeller shaft installer/pusher tool*

3. Press bearing until it bottoms.

Impeller Shaft Installation

NOTE: Ensure there is no O-ring in pump housing on the impeller cover side.

1. From the impeller cover side of pump, press impeller shaft assembly into housing.

REQUIRED TOOL
IMPELLER SHAFT BEARING TOOL (P/N 529 036 279)

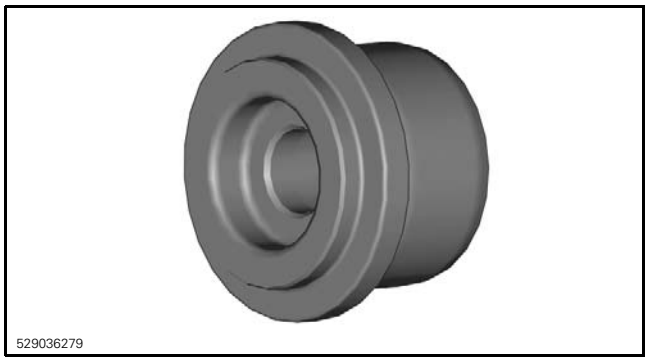
529036279

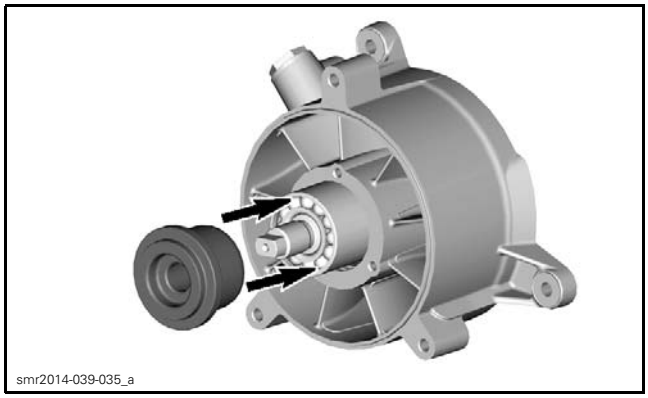
smr2014-039-035_a

smr2014-039-036_a

NOTE: Ensure impeller shaft turns freely and smoothly.

2. Turn pump upside down.
3. Coat shaft surface with JET PUMP BEARING GREASE (P/N 293 550 032).
4. Install a NEW O-ring at bottom.

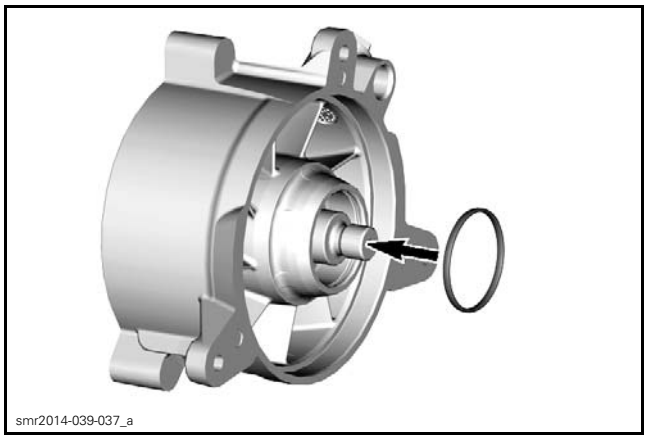
smr2014-039-037_a

5. Apply 4 ml (.1 U.S. oz) of JET PUMP BEARING GREASE (P/N 293 550 032) on bearing.

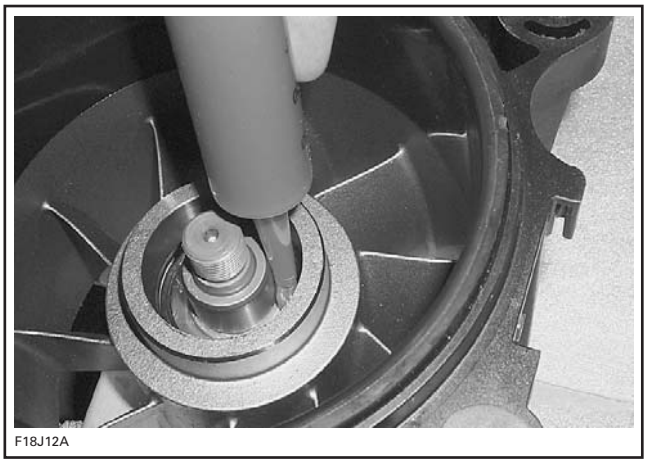
F18J12A

TYPICAL

REQUIRED TOOL
529036279

6. Install a NEW double lip seal. Make sure seal lip are facing upwards.

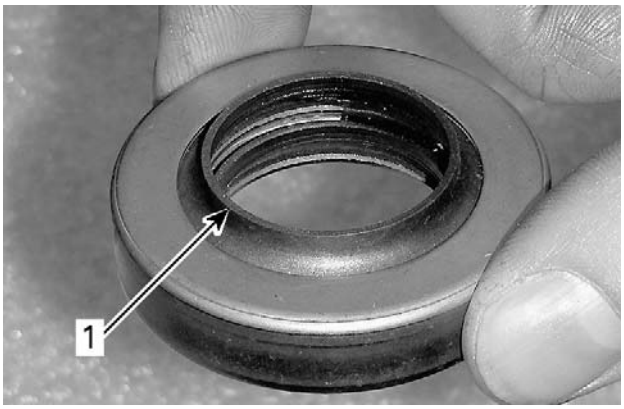

smr2009-006-015_a

1. Seal lip up

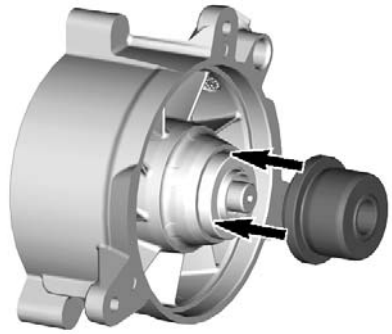

smr2014-039-038_a

smr2014-039-039_a

7. Install spacer.

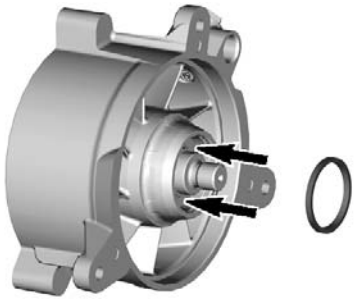

smr2014-039-040_a

8. Install **NEW** outer impeller shaft seal.

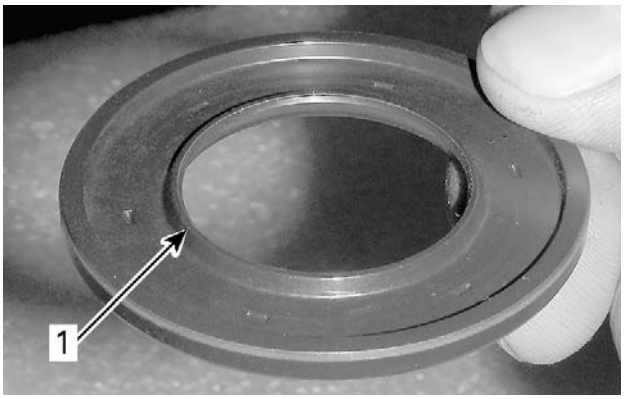

smr2009-006-016_a

1. Seal lip facing up

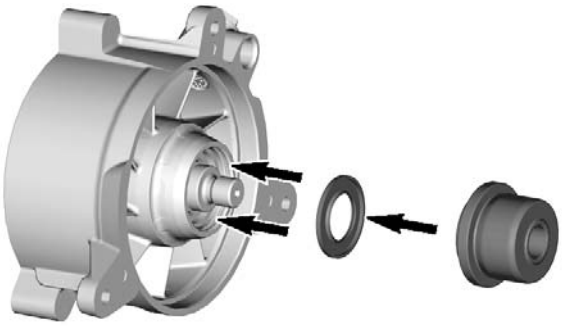

smr2014-039-041_a

smr2014-039-039_a

9. Install circlip.

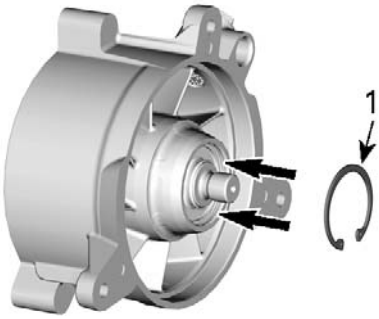

smr2014-039-042_a

TYPICAL

1. Circlip

10. Turn pump upside down.

11. Install the two impeller cover O-rings in pump housing.

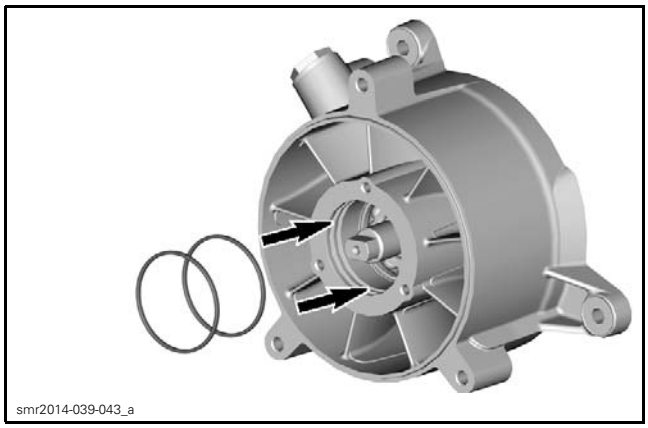
smr2014-039-043_a

12. Before installing any other parts, pressurize jet pump to insure proper seal installation. Refer to *LEAK TEST* in this subsection.
13. Install impeller. Refer to *IMPELLER* .
14. Mount required tool in a vise.

REQUIRED TOOL
PTO ADAPTER (P/N 529 036 273)

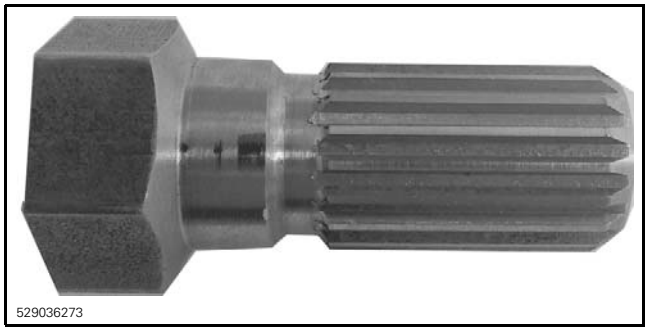
529036273

15. Using a 30 mm socket, screw the impeller shaft nut on clockwise.

TIGHTENING TORQUE	
M20 impeller shaft nut	125 N•m ± 10 N•m (92 lbf•ft ± 7 lbf•ft)

16. Apply 9 ml (.3 U.S. oz) of JET PUMP BEARING GREASE (P/N 293 550 032) on the bearing (nut side).

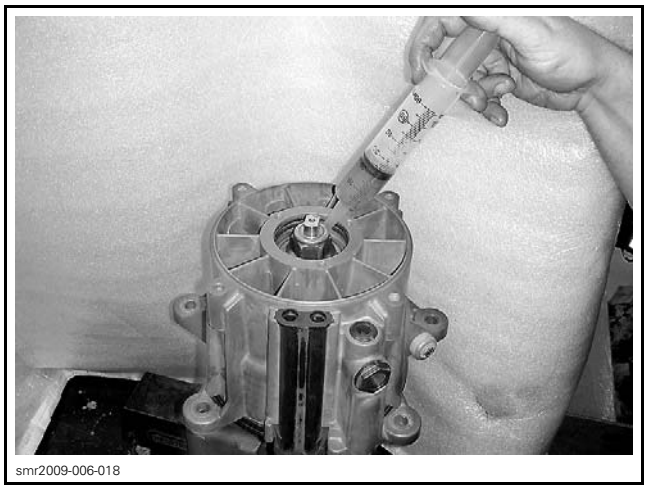
smr2009-006-018

TYPICAL

17. Install the impeller cover. Refer to *IMPELLER COVER*.